Kacise
Ultrasonic Transducer in Air
Catalogue
V4.12.3

contents

100Khz Common Transducer (KUAS-90-04A) ..... - 1 -

100Khz Common Transducer Type G (KUAS-100-03G) ..... - 2 -

100Khz Anti-corrosion Transducer (KUAS-100-02PE-F) ..... - 3 -

100Khz Anti-corrosion Transducer (KUAS-100-02PE) ..... - 4 -

100Khz Anti-corrosion Ex-proof Transducer (KUAS-100-02PE-FB) ..... - 5 -

100Khz Anti-corrosion Transducer (KUAS-100-02FA-F) ..... - 6 -

100Khz Ultrasonic Transducer (KUAS-100-WO) ..... - 7 -

100Khz Ultrasonic Transducer Type H (KUAS-100-03H) ..... - 8 -

100Khz Ultrasonic Transducer Type H (KUAS-100-03HA) ..... - 9 -

100Khz Ultrasonic Transducer Type H (KUAS-100-03HD) ..... - 10 -

100Khz Ultrasonic Transducer Type H (KUAS-100-03HE) ..... - 11 -

100Khz Ultrasonic Transducer Type H (KUAS-100-03HF) ..... - 12 -

100Khz Ultrasonic Transducer (KUAS-100-02A) ..... - 13 -

100Khz Ultrasonic Transducer (KUAS-100-03K) ..... - 14 -

100Khz Common Transducer (KUAS-90-04A)

100Item	Parameters	Photo
Name	100KHz common transducer	
Model	KUAS-90-04A	
Frequency	100KHz±5%	
Suggested range	0.3～5m	
Minimum impedance	900Ω±20％	
Capacitance	2000pF±20％ @1KHz	
Sensitivity	Load driving voltage: 300Vpp, distance 0.6m, echo amplitude 90mV	
Working voltage	Peak voltage <1500Vpp	
Working temperature	-40～+80℃	
Pressure	≤3kg or 0.3MPa	
Angle	(beam width) half power angle @-3dB: 4.7°±10%, sharpness angle: 11.1°±10%	
Housing material	POM	
Usage	Ultrasonic level meter, monitoring, anti-collision, security	
Connection	Thread: M59*2	
IP grade	IP68	
Weight	420g±5％ (cable length: 18cm)	
Wiring	Integrated interface: white: transducer +, black: transducer - 3P-PH2.0mm terminal: red: VCC, white: DQ, black: GND, temperature sensor wire	

Admittance graph	Dimension
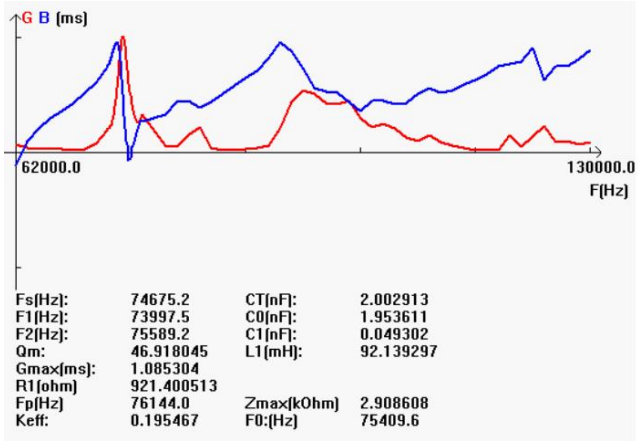	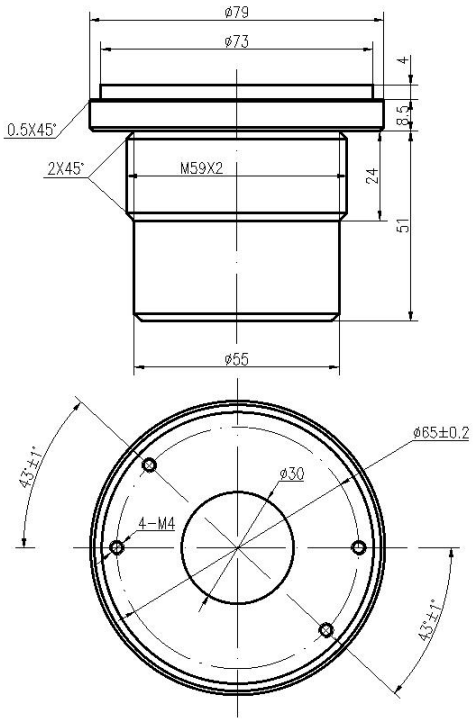

100Khz Common Transducer Type G (KUAS-100-03G)

100Item	Parameters	Photo
Name	100KHz common transducer type G	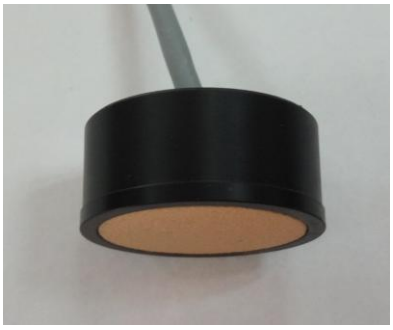
Model	KUAS-100-03G	
Frequency	100KHz±5%	
Suggested range	0.15～3m	
Minimum impedance	600Ω±20％	
Capacitance	1000pF±20％ @1KHz	
Sensitivity	No-load driving voltage: 300Vpp, distance 0.3m, echo amplitude 90mV	
Working voltage	Peak voltage <800Vpp	
Working temperature	-40～+80℃	
Pressure	≤3kg or 0.3MPa	
Angle	(beam width) half power angle @-3dB: 11.7°±10%, sharpness angle: 27.7°±10%	
Housing material	POM	
Connection	See the structural diagram for details	
IP grade	IP68	
Weight	20g±5％ (cable length: 20cm)	
Wiring	Integrated interface: red: transducer +, white: transducer -, black: shielded wire, (without temperature sensor by default)	

Admittance graph	Dimension
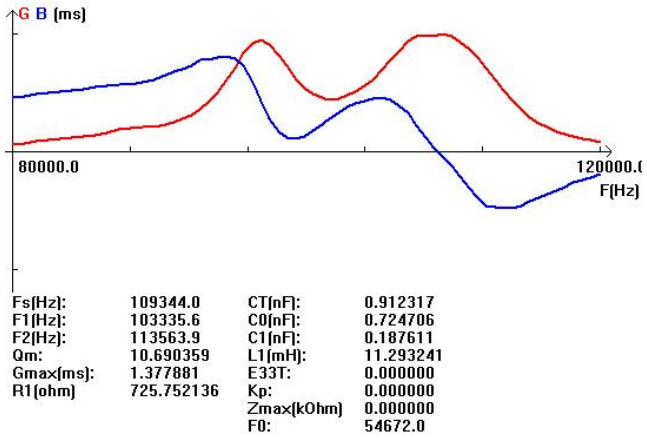	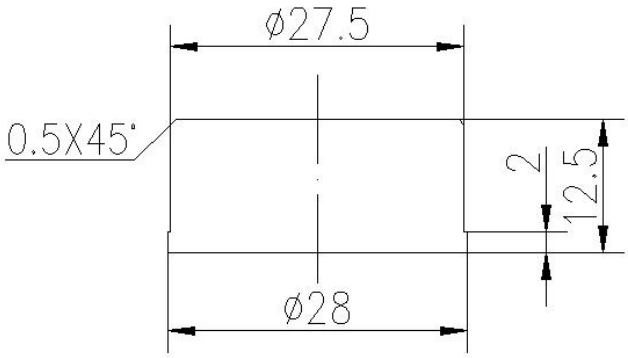

100Khz Anti-corrosion Transducer (KUAS-100-02PE-F)

100Item	Parameters	Photo
Name	100KHz anti-corrosion transducer	
Model	KUAS-100-02PE-F	
Frequency	100KHz±5%	
Suggested range	0.15～2m	
Minimum impedance	700Ω±20％	
Capacitance	2100pF±20％ @1KHz	
Sensitivity	No-load driving voltage: 300Vpp, distance 0.3m, echo amplitude 40mV	
Working voltage	Peak voltage <800Vpp	
Working temperature	-40～+80℃	
Pressure	≤3kg or 0.3MPa	
Angle	(beam width) half power angle @-3dB: 4.8°±10%, sharpness angle: 11.3°±10%	
Housing material	PVDF	
Usage	Ultrasonic level meter, monitoring, anti-collision, security	
Connection	See the structural diagram for details	
IP grade	IP68	
Weight	755g±5％ (cable length: 10m±0.3m)	
Wiring	Four wires: red: transducer +, white: transducer -, blue, black: temperature sensor wire Three wires: red: transducer +, blue: temperature sensor +, black: common--	

Admittance graph	Dimension
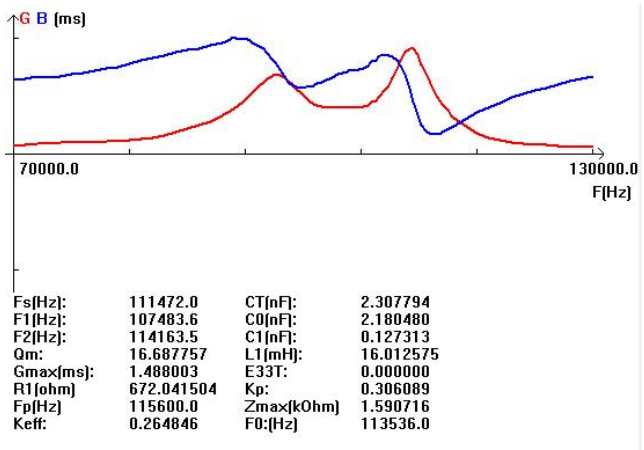	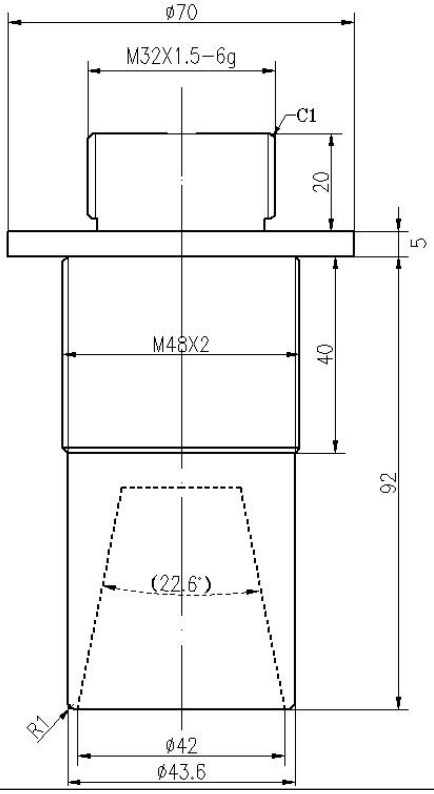

Tel: 0086-029-62929722 Email:support@kacise.com

100Khz Anti-corrosion Transducer (KUAS-100-02PE)

100Item	Parameters	Photo
Name	100KHz anti-corrosion transducer	
Model	KUAS-100-02PE	
Frequency	100KHz±5%	
Suggested range	0.15～2m	
Minimum impedance	700Ω±20％	
Capacitance	2100pF±20％ @1KHz	
Sensitivity	No-load driving voltage: 300Vpp, distance 0.3m, echo amplitude 40mV	
Working voltage	Peak voltage <800Vpp	
Working temperature	-40～+80℃	
Pressure	≤3kg or 0.3MPa	
Angle	(beam width) half power angle @-3dB: 4.8°±10%, sharpness angle: 11.3°±10%	
Housing material	PVDF	
Usage	Ultrasonic level meter, monitoring, anti-collision, security	
Connection	See the structural diagram for details	
IP grade	IP68	
Weight	300g±5％ (cable length: 10m±0.3m)	
Wiring	Interface (3P-XH 2.54mm terminal): red positive, white negative, black shielding wire Interface (3P-PH 2.0mm terminal): white and black are temperature sensor wires	

Admittance graph	Dimension
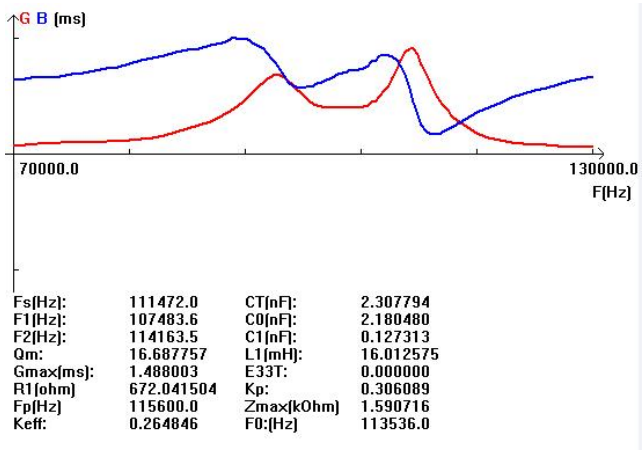	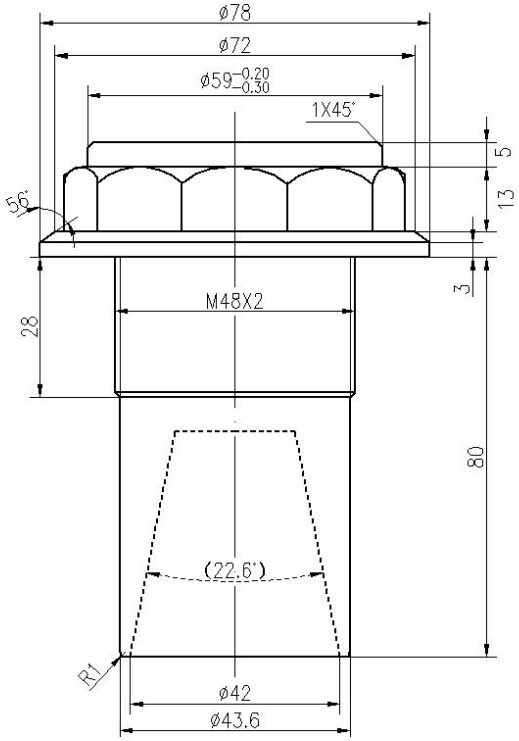

100Khz Anti-corrosion Ex-proof Transducer (KUAS-100-02PE-FB)

100Item	Parameters	Photo
Name	100KHz anti-corrosion Ex-proof transducer	
Model	KUAS-100-02PE-FB	
Frequency	100KHz±5%	
Suggested range	0.15～2m	
Minimum impedance	700Ω±20％	
Capacitance	2100pF±20％ @1KHz	
Sensitivity	No-load driving voltage: 300Vpp, distance 0.3m, echo amplitude 40mV	
Working voltage	Peak voltage <800Vpp	
Working temperature	-40～+80℃	
Pressure	≤3kg or 0.3MPa	
Angle	(beam width) half power angle @-3dB: 4.8°±10%, sharpness angle: 11.3°±10%	
Housing material	PVDF	
Usage	Ultrasonic level meter, monitoring, anti-collision, security	
Connection	See the structural diagram for details	
IP grade	IP68	
Weight	300g±5％	
Wiring	Interface (3P-XH 2.54mm terminal): red positive, white negative, black shielding wire Interface (3P-PH 2.0mm terminal): white and black are temperature sensor wires	

Admittance graph	Dimension
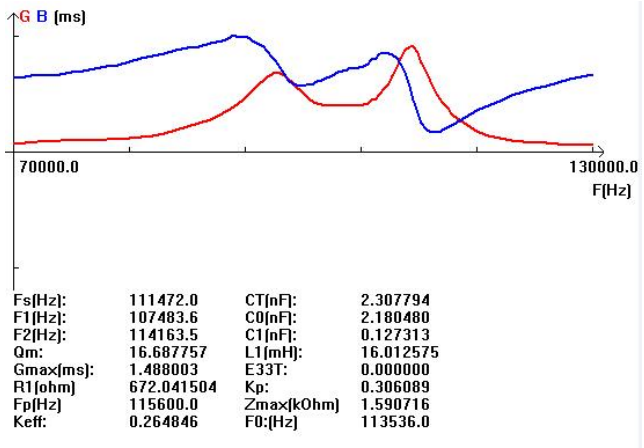	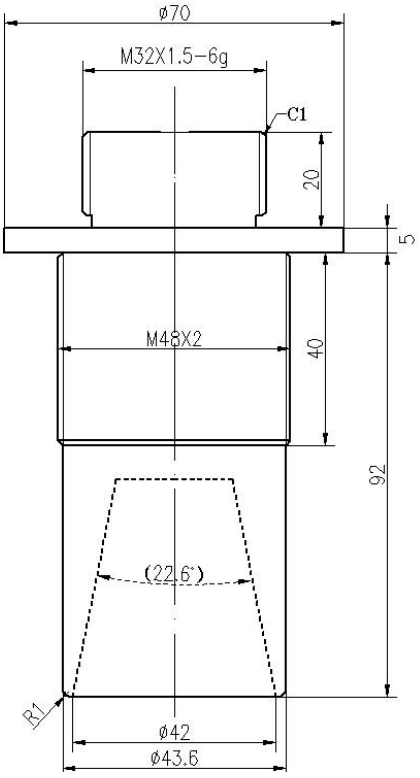

100Khz Anti-corrosion Transducer (KUAS-100-02FA-F)

100Item	Parameters	Photo
Name	100KHz anti-corrosion transducer	
Model	KUAS-100-02PA-F	
Frequency	100KHz±5%	
Suggested range	0.15～1.5m	
Minimum impedance	1300Ω±20％	
Capacitance	2000pF±20％ @1KHz	
Sensitivity	No-load driving voltage: 300Vpp, distance 0.6m, echo amplitude 10mV	
Working voltage	Peak voltage <800Vpp	
Working temperature	-40～+80℃	
Pressure	≤3kg or 0.3MPa	
Housing material	PTFE	
Usage	Ultrasonic level meter, monitoring, anti-collision, security	
Connection	See the structural diagram for details	
IP grade	IP68	
Weight	570g±5％ (cable length: 10m)	
Wiring	Four wires: red: transducer +, white: transducer -, blue, black: temperature sensor wire; Three wires: red: transducer +, blue: temperature sensor +, black: common-	

Admittance graph	Dimension
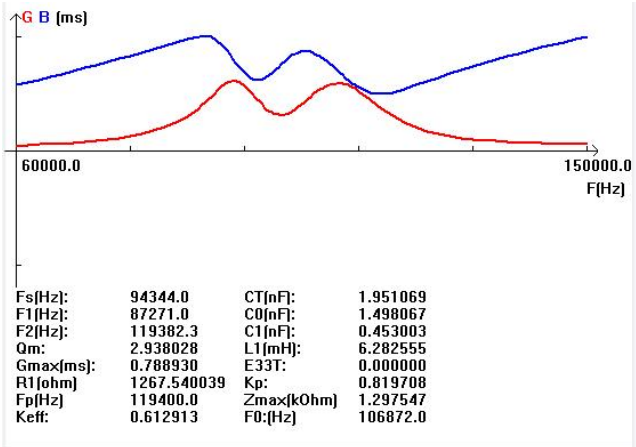	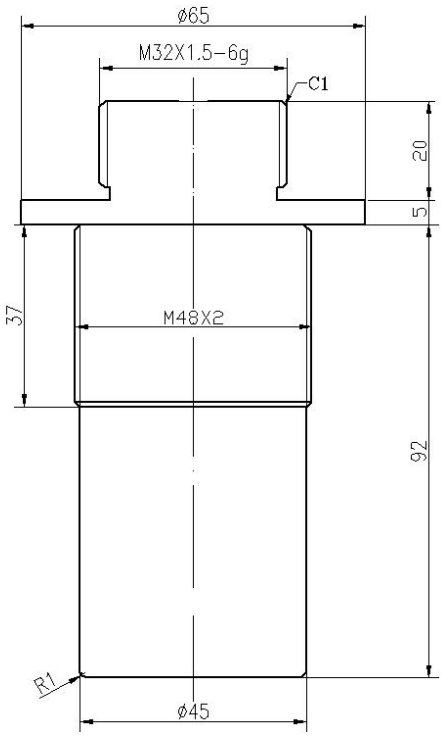

100Khz Ultrasonic Transducer (KUAS-100-WO)

100Item	Parameters	Photo
Name	100KHz Ultrasonic transducer	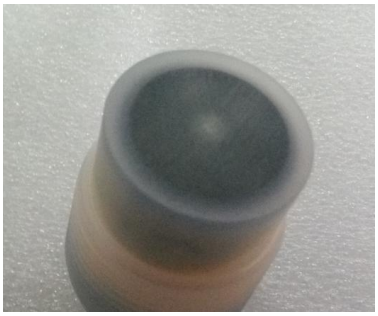
Model	KUAS-100-WO	
Frequency	100KHz±5%	
Suggested range	0.15～2m	
Minimum impedance	320Ω±20％	
Capacitance	760pF±20％ @1KHz	
Sensitivity	No-load driving voltage: 300Vpp, distance 0.3m, echo amplitude 40mV	
Working voltage	Peak voltage <800Vpp	
Working temperature	-40～+80℃	
Pressure	≤3kg or 0.3MPa	
Angle	(beam width) half power angle @-3dB: 11.7°±10%, sharpness angle: 27.7°±10%	
Housing material	PVDF	
Usage	Distance measurement	
Connection	See the structural diagram for details	
IP grade	IP68	
Weight	46g±5％ (cable length: 10m)	
Wiring	Red: transducer +, white: transducer -, black: shielding wire, (without temperature sensor by default)	

Admittance graph	Dimension
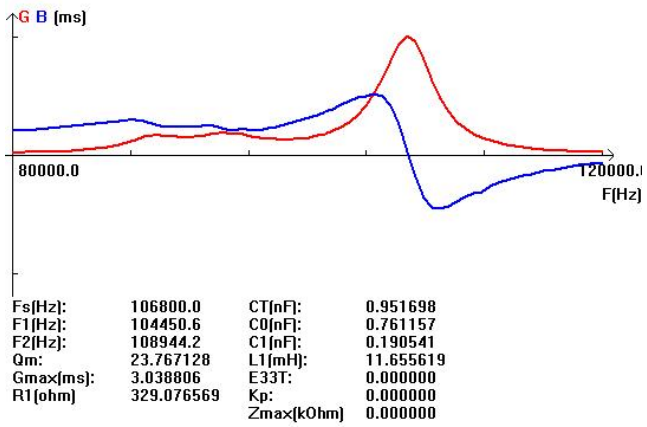	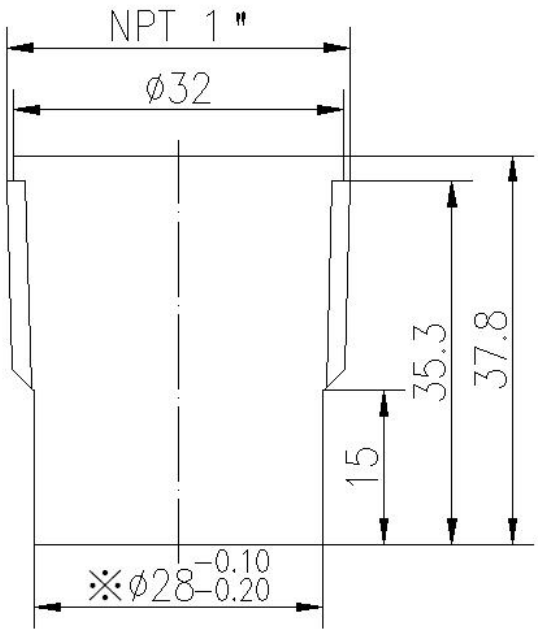

100Khz Ultrasonic Transducer Type H (KUAS-100-03H)

100Item	Parameters	Photo
Name	100KHz Ultrasonic transducer type H	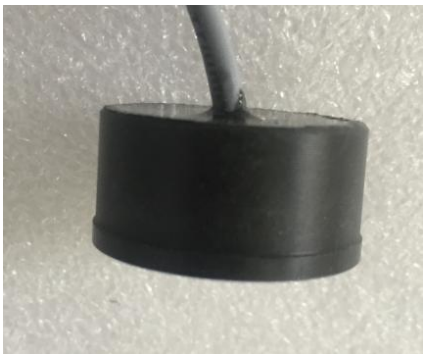
Model	KUAS-100-03H	
Frequency	100KHz±5%	
Suggested range	0.15～3m	
Minimum impedance	320Ω±20％	
Capacitance	950pF±20％ @1KHz	
Sensitivity	No-load driving voltage: 300Vpp, distance 0.3m, echo amplitude 80mV	
Working voltage	Peak voltage <800Vpp	
Working temperature	-40～+80℃	
Pressure	≤3kg or 0.3MPa	
Angle	(beam width) half power angle @-3dB: 11.7°±10%, sharpness angle: 27.7°±10%	
Housing material	POM	
Connection	See the structural diagram for details	
IP grade	IP68	
Weight	17g±5％ (cable length: 20cm)	
Wiring	Red: transducer +, white: transducer -, black: shielding wire, (without temperature sensor by default)	

Admittance graph	Dimension
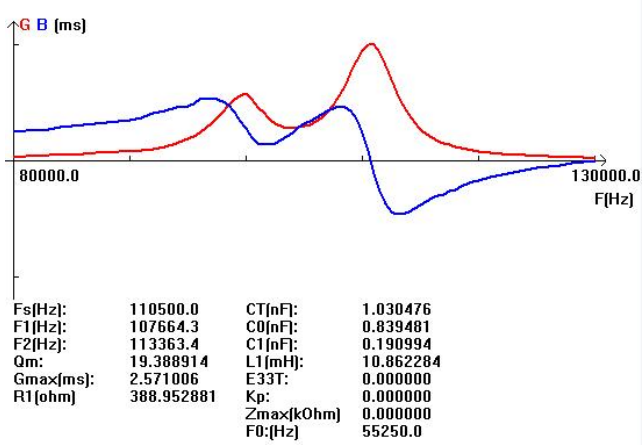	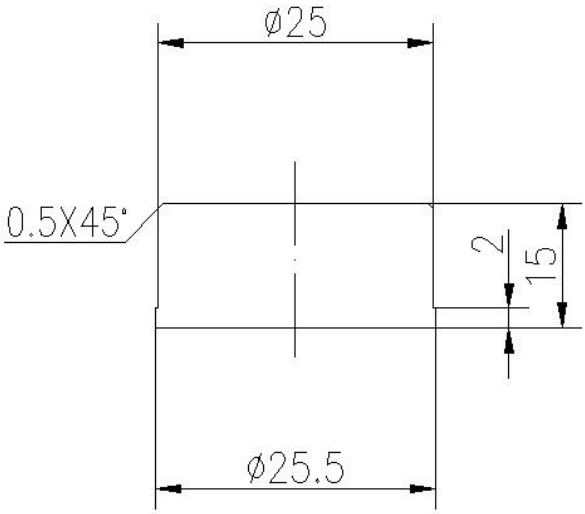

Tel: 0086-029-62929722 Email:support@kacise.com

100Khz Ultrasonic Transducer Type H (KUAS-100-03HA)

100Item	Parameters	Photo
Name	100KHz Ultrasonic transducer type H	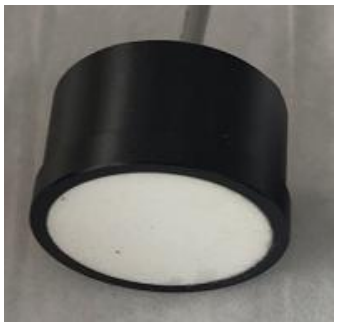
Model	KUAS-100-03HA	
Frequency	100KHz±5%	
Suggested range	0.15～3m	
Minimum impedance	350Ω±20％	
Capacitance	950pF±20％ @1KHz	
Sensitivity	No-load driving voltage: 300Vpp, distance 0.3m, echo amplitude 80mV	
Working voltage	Peak voltage <800Vpp	
Working temperature	-40～+80℃	
Pressure	≤3kg or 0.3MPa	
Angle	(beam width) half power angle @-3dB: 11.7°±10%, sharpness angle: 27.7°±10%	
Housing material	POM	
Connection	See the structural diagram for details	
IP grade	IP68	
Weight	17g±5％ (cable length: 20cm)	
Wiring	Red: transducer +, white: transducer -, black: shielding wire, (without temperature sensor by default)	

Admittance graph	Dimension
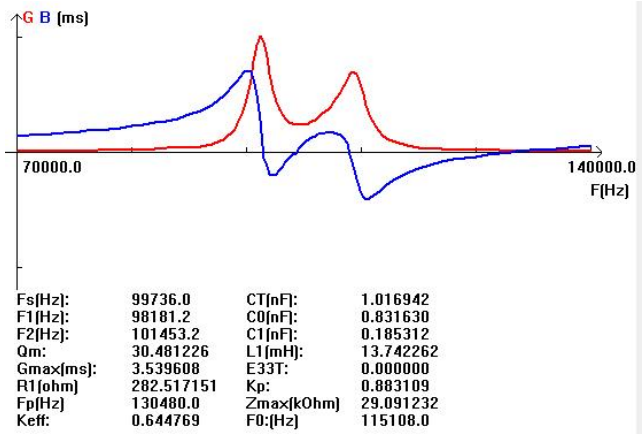	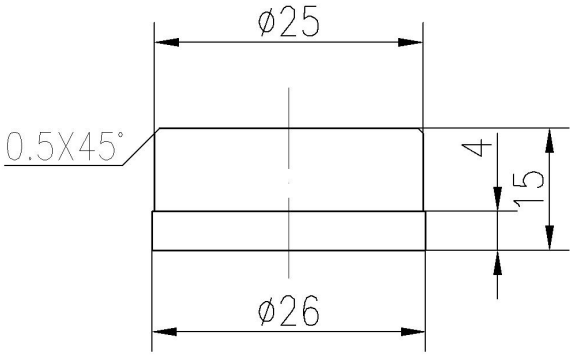

100Khz Ultrasonic Transducer Type H (KUAS-100-03HD)

100Item	Parameters	Photo
Name	100KHz Ultrasonic transducer type H	
Model	KUAS-100-03HD	
Frequency	100KHz±5%	
Suggested range	0.15～3m	
Minimum impedance	300Ω±20％	
Capacitance	1100pF±20％ @1KHz	
Sensitivity	No-load driving voltage: 300Vpp, distance 0.3m, echo amplitude 80mV	
Working voltage	Peak voltage <800Vpp	
Working temperature	-40～+80℃	
Pressure	≤3kg or 0.3MPa	
Angle	(beam width) half power angle @-3dB: 11.7°±10%, sharpness angle: 27.7°±10%	
Housing material	ABS	
Connection	See the structural diagram for details	
IP grade	IP68	
Weight	18g±5％ (cable length: 20cm)	
Wiring	Red: transducer +, white: transducer -, black: shielding wire, (without temperature sensor by default)	

Admittance graph	Dimension
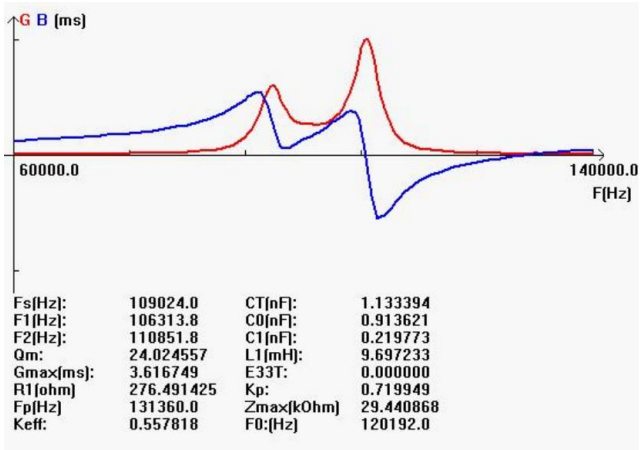	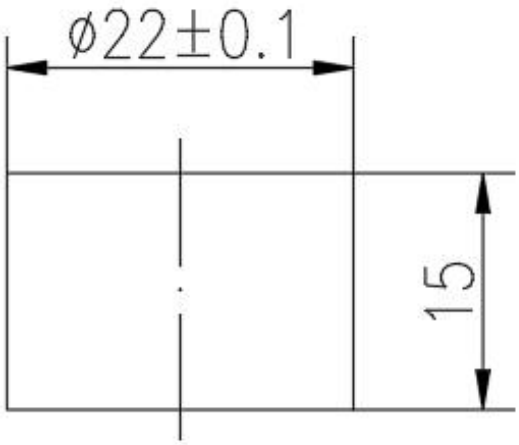

100Khz Ultrasonic Transducer Type H (KUAS-100-03HE)

100Item	Parameters	Photo
Name	100KHz Ultrasonic transducer type H	
Model	KUAS-100-03HE	
Frequency	100KHz±5%	
Suggested range	0.15～3m	
Minimum impedance	250Ω±20％	
Capacitance	1200pF±20％ @1KHz	
Sensitivity	No-load driving voltage: 300Vpp, distance 0.3m, echo amplitude 100mV	
Working voltage	Peak voltage <800Vpp	
Working temperature	-40～+80℃	
Pressure	≤3kg or 0.3MPa	
Angle	(beam width) half power angle @-3dB: 11.7°±10%, sharpness angle: 27.7°±10%	
Housing material	POM	
Connection	See the structural diagram for details	
IP grade	IP68	
Weight	20g±5％ (cable length: 22cm)	
Wiring	Red: transducer +, white: transducer -, black: shielding wire, (without temperature sensor by default)	

Admittance graph	Dimension
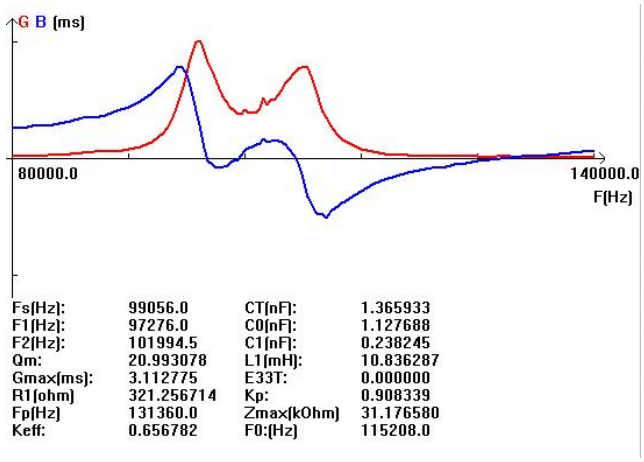	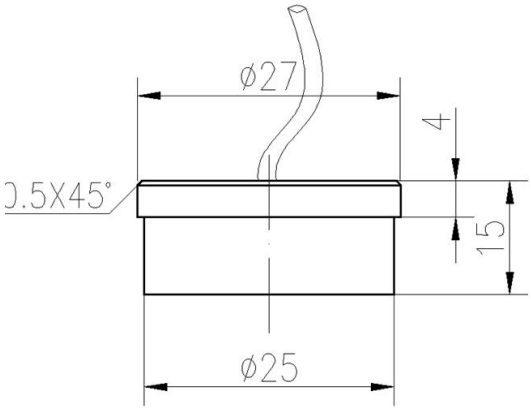

100Khz Ultrasonic Transducer Type H (KUAS-100-03HF)

100Item	Parameters	Photo
Name	100KHz Ultrasonic transducer type H	
Model	KUAS-100-03HF	
Frequency	100KHz±5%	
Suggested range	0.15～3m	
Minimum impedance	270Ω±20％	
Capacitance	650pF±20％ @1KHz	
Sensitivity	No-load driving voltage: 300Vpp, distance 0.3m, echo amplitude 100mV	
Working voltage	Peak voltage <800Vpp	
Working temperature	-40～+80℃	
Pressure	≤3kg or 0.3MPa	
Angle	(beam width) half power angle @-3dB: 11.7°±10%, sharpness angle: 27.7°±10%	
Housing material	POM	
Connection	See the structural diagram for details	
IP grade	IP68	
Weight	19g±5％ (cable length: 22cm)	
Wiring	Red: transducer +, white: transducer -, black: shielding wire, (without temperature sensor by default)	

Admittance graph	Dimension
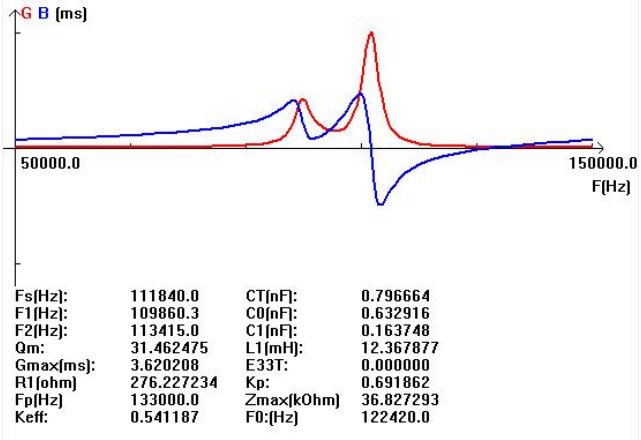	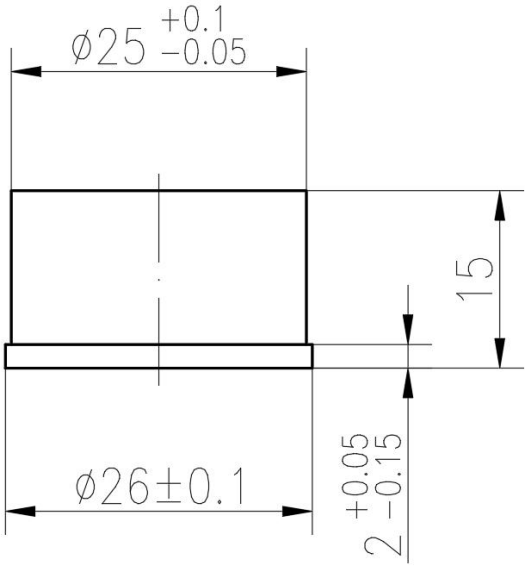

100Khz Ultrasonic Transducer (KUAS-100-02A)

100Item	Parameters	Photo
Name	100KHz Ultrasonic transducer	
Model	KUAS-100-02A	
Frequency	100KHz±5%	
Suggested range	0.15～2m	
Minimum impedance	320Ω±20％	
Capacitance	760pF±20％ @1KHz	
Sensitivity	No-load driving voltage: 300Vpp, distance 0.3m, echo amplitude 70mV	
Working voltage	Peak voltage <800Vpp	
Working temperature	-40～+80℃	
Pressure	≤3kg or 0.3MPa	
Angle	(beam width) half power angle @-3dB: 11.7°±10%, sharpness angle: 27.7°±10%	
Housing material	POM	
Connection	See the structural diagram for details	
IP grade	IP68	
Weight	180g±5％ (cable length: 10cm)	
Wiring	Interface (3P-XH2.54mm terminal): red positive, white negative, black shielding wire; Interface (3P-PH2.0mm terminal): white and black are temperature sensor wires	

Admittance graph	Dimension
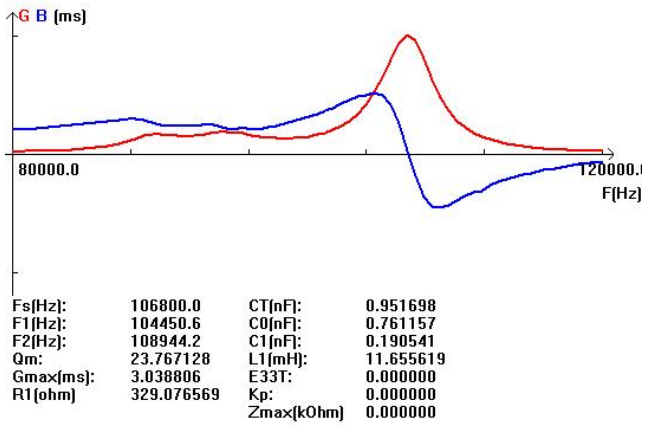	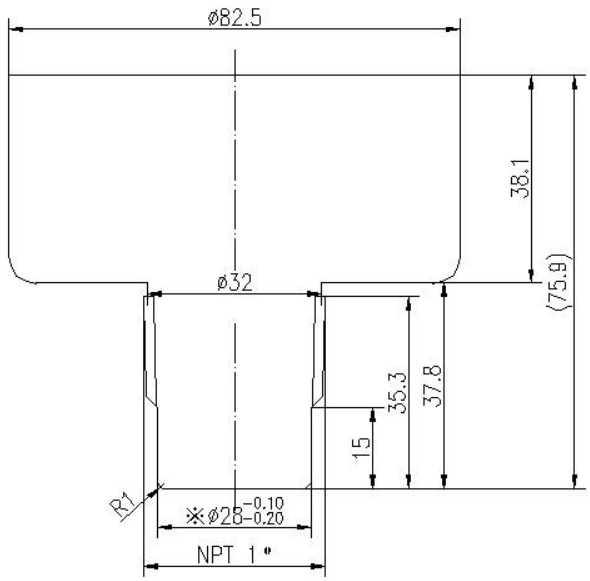

100Khz Ultrasonic Transducer (KUAS-100-03K)

100Item	Parameters	Photo
Name	100KHz Ultrasonic transducer	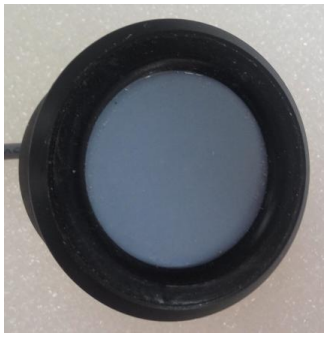
Model	KUAS-100-03K	
Frequency	102KHz±5%	
Suggested range	0.15～3m	
Minimum impedance	300Ω±20％	
Capacitance	900pF±20％ @1KHz	
Sensitivity	No-load driving voltage: 300Vpp, distance 0.6m, echo amplitude 30mV	
Working voltage	Peak voltage <800Vpp	
Working temperature	-40～+80℃	
Pressure	≤3kg or 0.3MPa	
Angle	(beam width) half power angle @-3dB: 11.7°±10%, sharpness angle: 27.7°±10%	
Housing material	ABS	
Connection	See the structural diagram for details	
IP grade	IP68	
Weight	55g±5％ (cable length: 10cm)	
Wiring	Red: transducer +, white: transducer -, black: shielding wire, (without temperature sensor by default)	

Admittance graph	Dimension
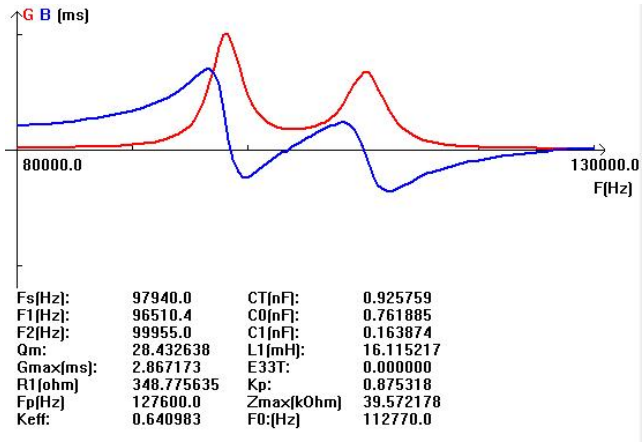	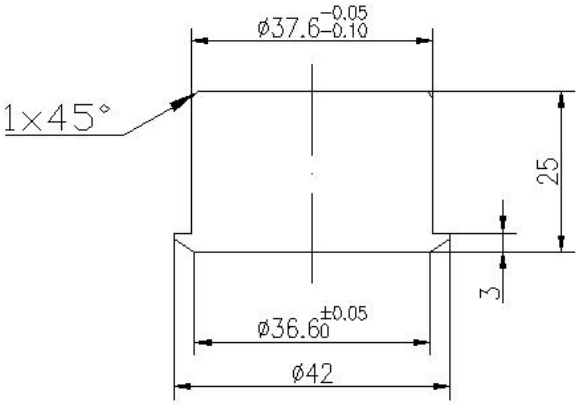

Tel: 0086-029-62929722 Email:support@kacise.com